Double Rack - Each envelope
132" x 16" x 96" Deep.

Loading + unloading stations

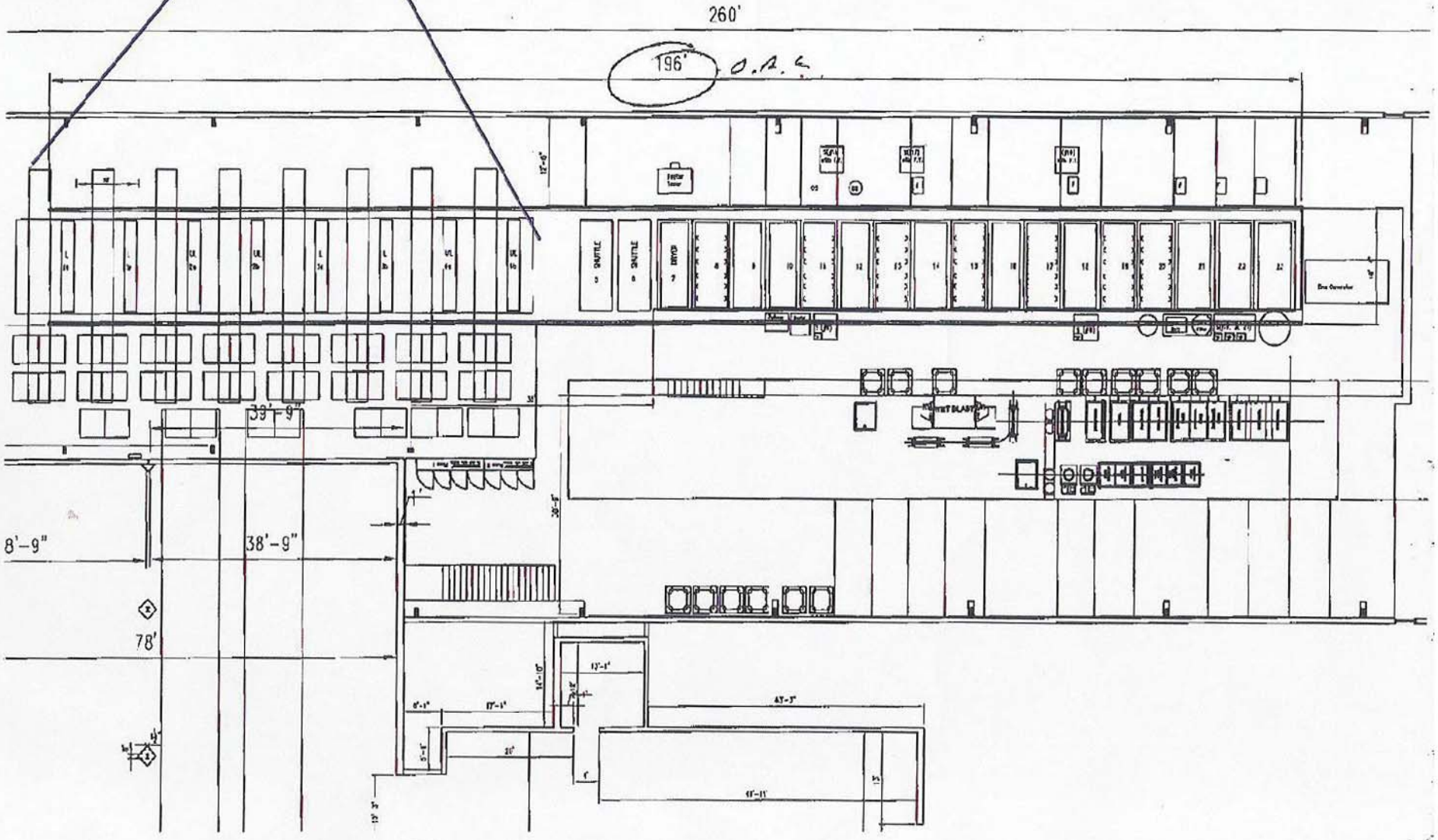

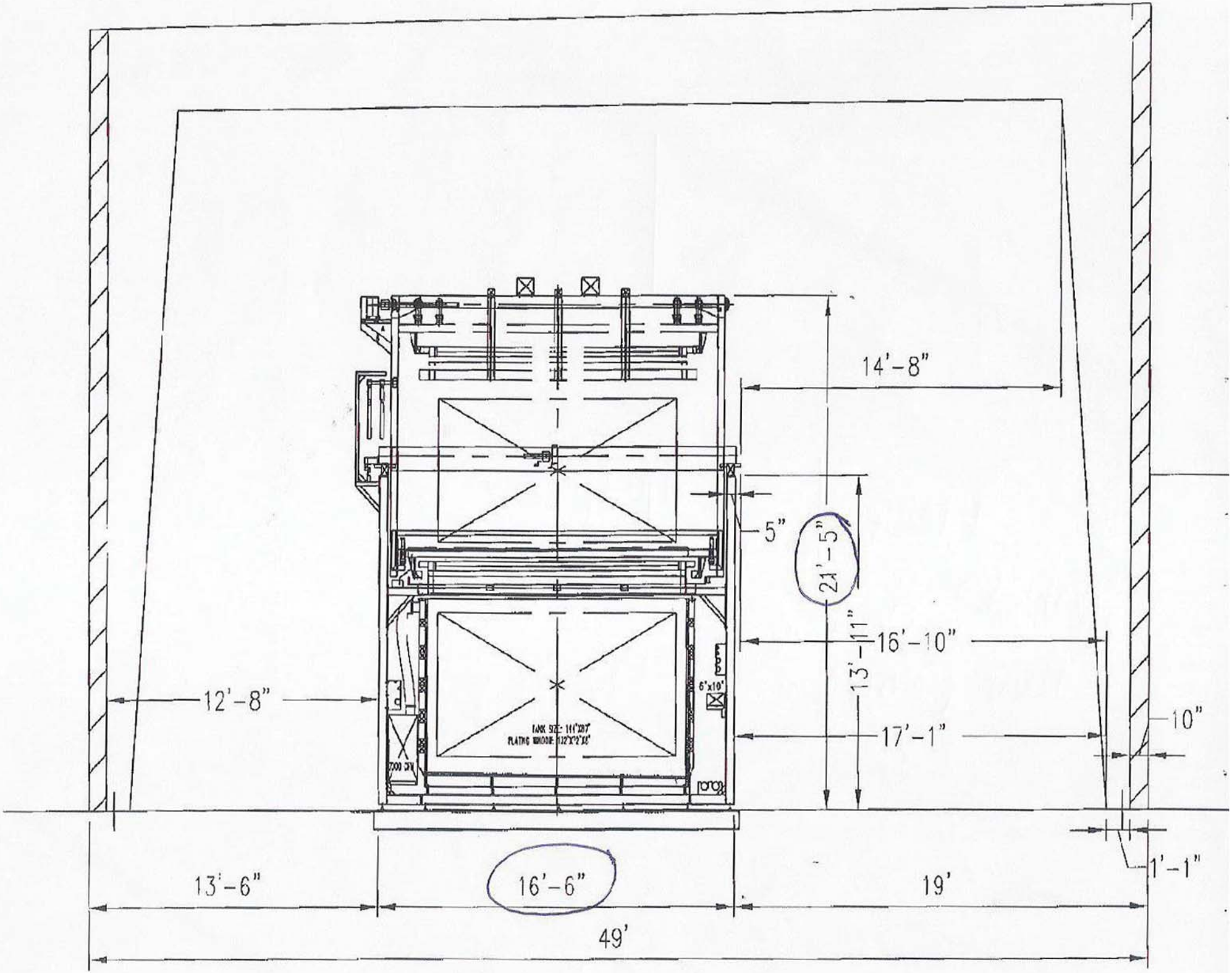
14'-8"
5"
21'-5"
16'-10"
13'-11"
17'-1"
12'-8"
10"
1'-1"
13'-6"
16'-6"
19'
49'